206973
BEK 1-P-27
Holder for filter disk

- Reliable and quick installation of filter discs on BEK-P… spotlight
- Robust design
- Aluminum housing

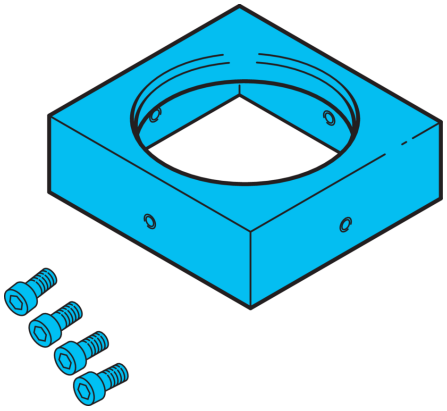

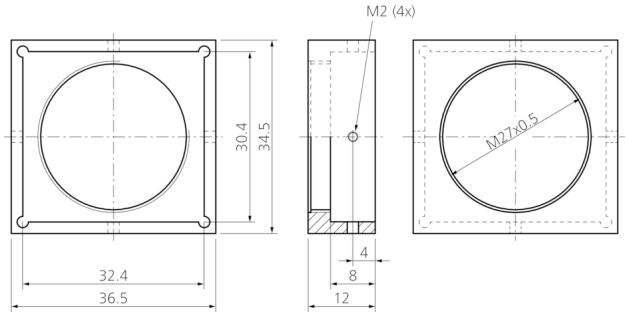

Function

Technical data (typ.)	+20°C, 24 V DC
Housing dimensions	36.5 x 34.5 x 12 mm
Thread	M27 x 0.5
Housing material	Aluminum (Black, Anodized)
Weight	15 g
Component	Holder for filter disk
To be used for	Spotlights BEK-Pxx ... (axial)
Scope of delivery	Holder for filter disk, 4 cylinder head screws M2

More information / accessories	https://www.di-soric.com/206973

© di-soric . Right to change reserved . 14.10.2023 . Page 1 (1)