201627
SH 30 A
Sensor holder

- For cylindrical sensors of Ø 30 mm or thread M30
- Quick commissioning
- Reduced assembly / downtime due to one-piece construction
- Sensor replacement without changing the clamp position
- Limit stop for sensor replacement without readjustment
- Slots permit clamp adjustment

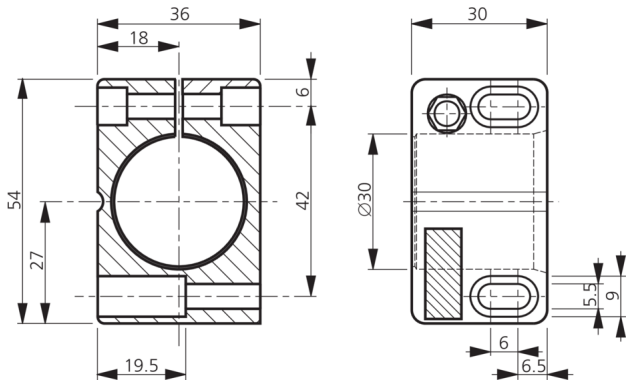

Technical data (typ.)	+20°C
Hole spacing	42 mm
Mounting	Hole
Housing dimensions	36 x 30 x 54 mm
Clamping diameter	G: 30 mm
Housing material	Plastic (PA, 6 GK)
Component	Sensor holder
Characteristics	with limit stop
To be used for	Sensors with thread M30
Scope of delivery	Sensor holder

More information / accessories	https://www.di-soric.com/201627

© di-soric . Right to change reserved . 08.06.2023 . Page 1 (1)